







MURPHY DESK BED

MADE IN THE USA





DVB50

Vertical Desk Bed

A vertical Murphy desk bed stores the bed upright, requiring less wall width. It features a 60" wide by 23" deep stay-level desk, making it an excellent choice for narrower rooms or spaces where you'd like to maximize storage with additional cabinets on either side.





VVB50







- Choose Your Model
- Choose Your Finish
- Choose Your Handles
- Choose Light Package
- Choose Your Storage









PVB50



IVB50



RVB50



QVSB50

Horizontal Desk Bed

A horizontal Murphy desk bed stores the bed lengthwise, requiring more wall width. It features a larger 82" wide by 23" deep stay-level desk, providing additional workspace for larger projects, or shared work areas. It's also available without the upper shelf, making it an excellent option for rooms with lower ceilings.



IW50





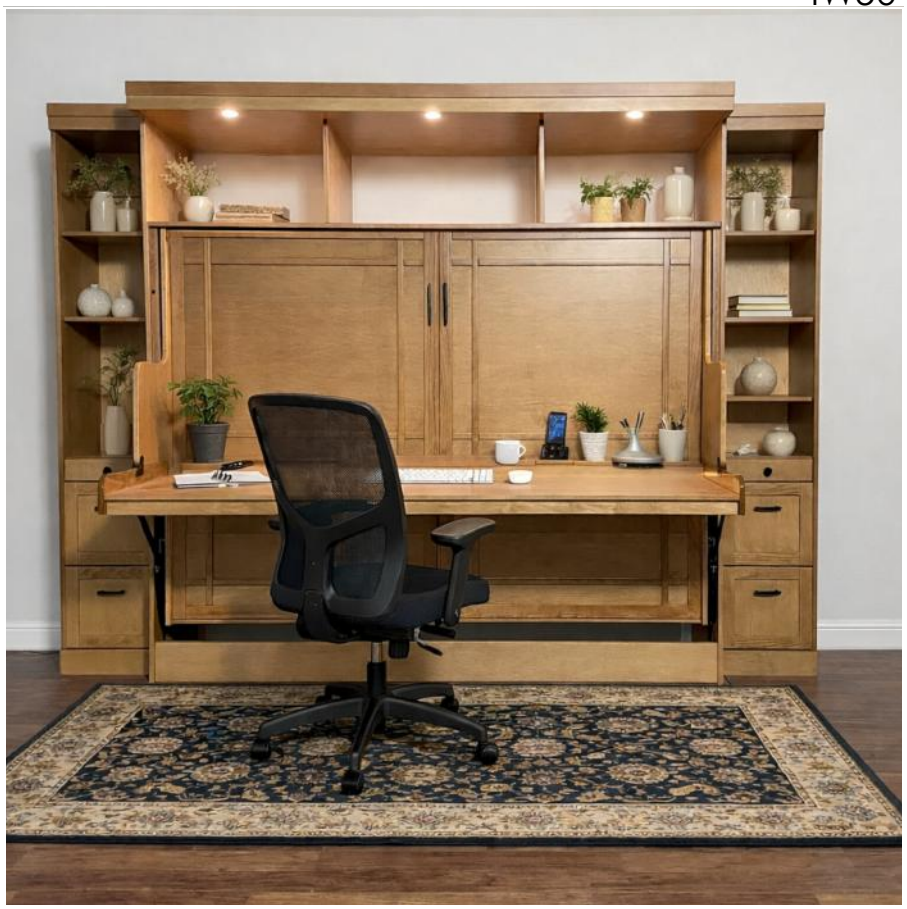





DW50 IN COGNAC STAIN

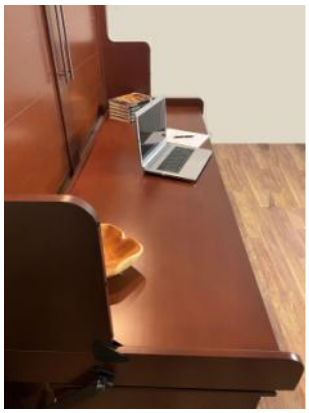











DW50 CARAMEL STAIN







EW50 IN WHITE PAINT



VW50 IN MAPLE STAIN







PW50 IN SUNSET STAIN

Queen Size Desk Bed

DIMENSIONS

AS A DESK

88.25 wide x 48" deep x 90" high

AS A BED

88.25 wide x 70" deep x 90" high



RW50 IN WHITE PAINT



RW50 IN HAZELNUT

RB50 IN CARAMEL STAIN





3 LED LIGHT PACKAGE



A horizontal Murphy desk bed without the upper shelf, makes an excellent option for rooms with lower ceilings. Includes a finished top board for a place to set items.



RB50 IN WHITE



EB50 & AFC PEBBLE



EB50 & AFC IN WHITE PAINT



EB50 SUNSET







PB50 IN BARK





IB50



VB50



IB50

Vertical Desk Bed

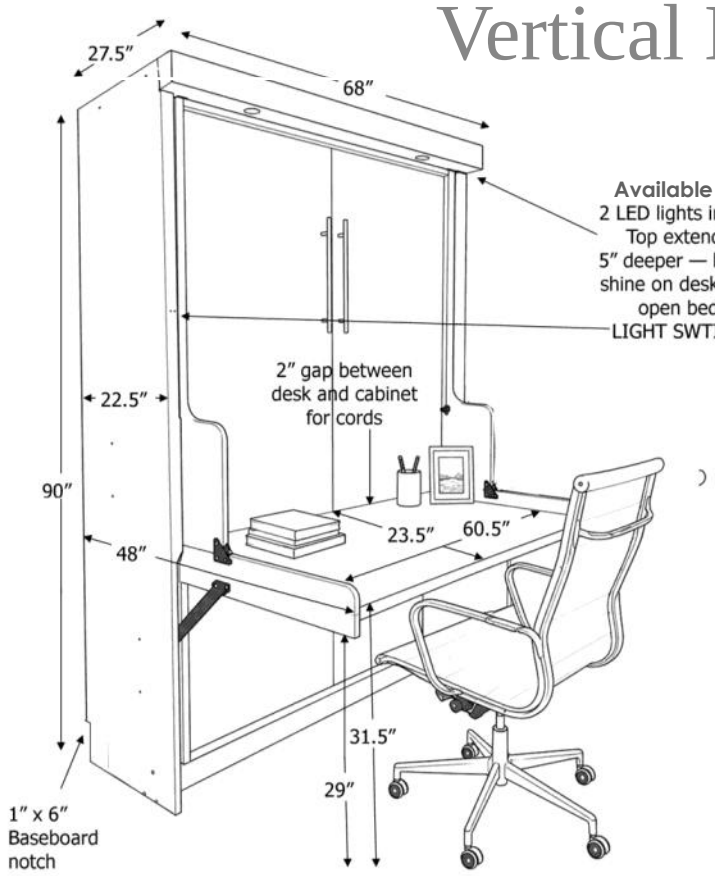

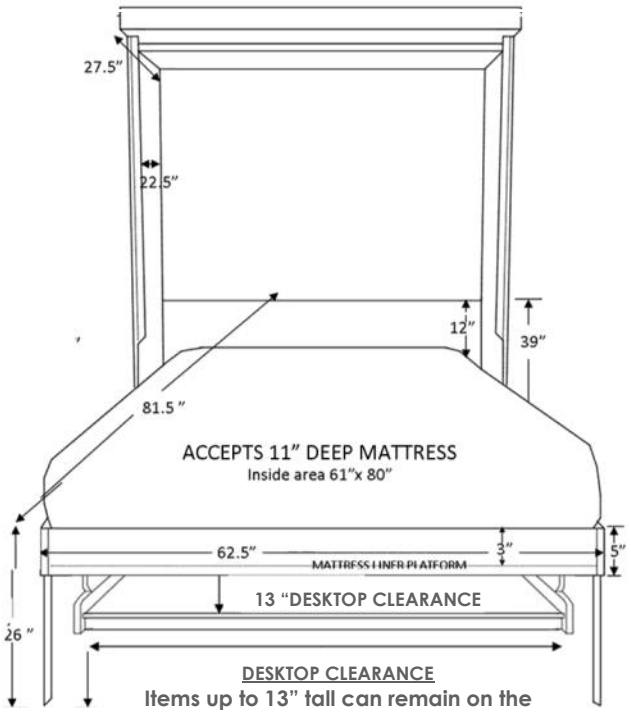

DESKTOP CLEARANCE
Items up to 13" tall can remain on the stay-level desk when you open the bed.

MUST REMOVE ITEMS FROM UNDER THE BED BEFORE OPENING THE BED AS THE DESK RESTS ON THE FLOOR

Horizontal Desk Bed

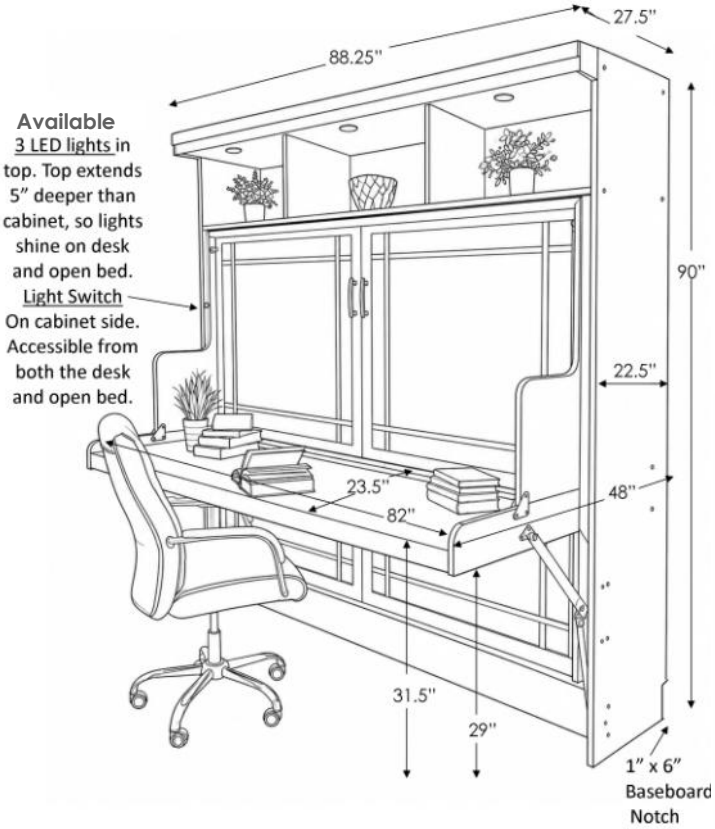

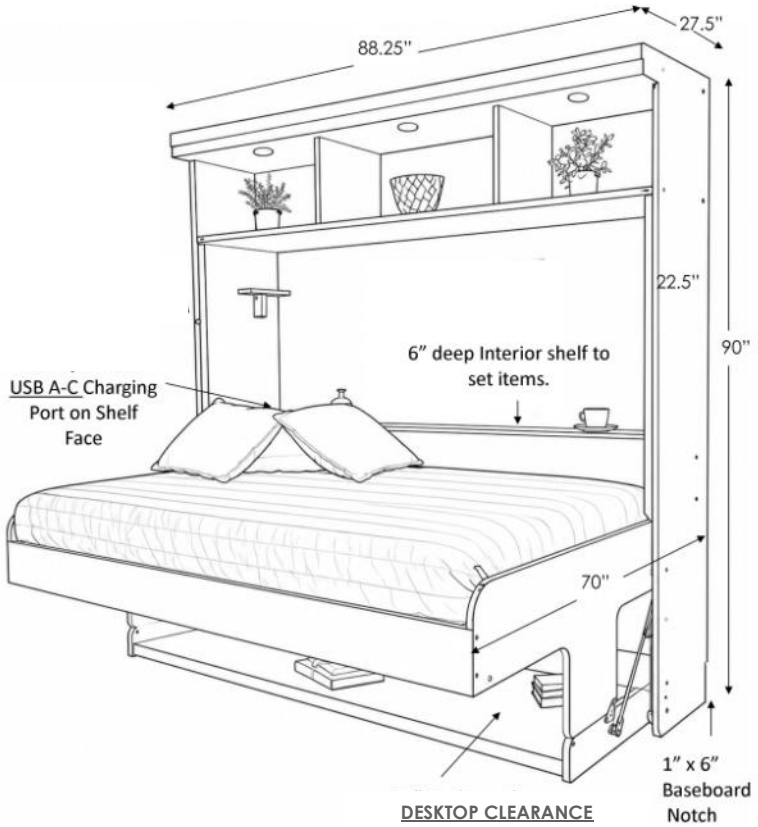

DESKTOP CLEARANCE
Items up to15" -16" tall can remain on the stay-level desk when you open the bed. (depending on the model)



CARAMEL (B) HAZELNUT (H) HONEY MAPLE (M) PEBBLE (P) NATURAL (N)



CINNAMON(E) COGNAC(R) SUNSET (S) BARK GRAY (BG) ESPRESSO (D)



WHITE (WH) ALABASTER (A) COBALT (C)

Actual product may also have grain pattern, character markings and dark or light variations. The overall appearance will provide an even coloring, but subtly reveal the joinery seams and wood grain effects of your true wood furniture. Please refer to the actual wood sample.

Same Height

The side cabinets are the same height as the wallbed for a continuous built-in look.

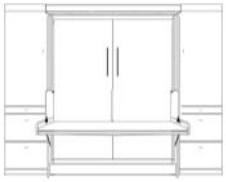

CHOICE OF HEIGHTS

90" & 85"
Choose 85" for a step down look or 90" to match a queen bed height.

Step Down



Cabinets are 5" shorter than a queen bed for a step down look.

OPEN STORAGE

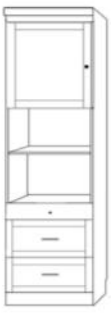

Nightstand + Door



Nightstand



3 Drawer



File Cabinet



Door



Bookcase

CLOSED STORAGE



Wardrobe + File Cabinet



Wardrobe + Drawers



Large Wardrobe



Nightstand



File Cart